INJ 1...

PoE injector

Data sheet
107973_en_00

1 Description

The injectors connect Ethernet devices without PoE (e.g. switches) with PoE-ready end devices (e.g. IP cameras). The injector as power sourcing equipment (PSE) provides the required power to a powered device (PD) by way of the data cable.

The injector and end device negotiate the electrical power requirements autonomously. Ensure that end devices with an electrical power requirement of up to 30 W fulfill the requirements of IEEE 802.3af and at.

The power supply and the Power over Ethernet port are electrically isolated on the devices INJ 1100-T and INJ 1110-T. Thus, these devices are protected against short circuits in the data lines on the field side.

Features

- Product versions for 30 W or 60 W
- 10/100/1000 Mbps
- Mounting on a DIN rail
- Safe shield connection to ground potential
- Extended supply voltage range 18 V DC ... 57 V DC, redundant

Make sure you always use the latest documentation.
It can be downloaded from the product at phoenixcontact.net/products.

2 Table of contents

3 Ordering data

Description	Type	Order No.	Pcs./Pkt.
PoE injector, 30 W, two RJ45 sockets, 10/100/1000 Mbps, DIN rail mounting, IP20	INJ 1000	2703005	1
PoE injector, 30 W, two RJ45 sockets, 10/100/1000 Mbps, DIN rail mounting, IP20, expanded temperature range of -40°C ... 75°C	INJ 1000-T	2703006	1
PoE injector, 30 W, two RJ45 sockets, 10/100/1000 Mbps, DIN rail mounting, IP20, expanded temperature range of -40°C ... 75°C, potential separation	INJ 1100-T	2703009	1
PoE injector, 60 W, two RJ45 sockets, 10/100/1000 Mbps, DIN rail mounting, IP20	INJ 1010	2703007	1
PoE injector, 60 W, two RJ45 sockets, 10/100/1000 Mbps, DIN rail mounting, IP20, expanded temperature range of -40°C ... 75°C	INJ 1010-T	2703008	1
PoE injector, 60 W, two RJ45 sockets, 10/100/1000 Mbps, DIN rail mounting, IP20, expanded temperature range of -40°C ... 75°C, potential separation	INJ 1110-T	2703010	1

Accessories	Type	Order No.	Pcs./Pkt.
Patch panel, two RJ45 sockets, 10/100/1000 Mbps, DIN rail mounting, IP20, shield contacting with strain relief	PP-RJ-RJ	2703015	1
Patch panel, RJ45 socket on screw terminal blocks, 10/100/1000 Mbps, DIN rail mounting, IP20, shield contacting with strain relief	PP-RJ-SC	2703016	1
Patch panel, RJ45 socket on push-in terminal blocks, 10/100/1000 Mbps, DIN rail mounting, IP20, shield contacting with strain relief	PP-RJ-SCC	2703018	1
Patch panel, RJ45 socket on IDC terminal blocks, 10/100/1000 Mbps, DIN rail mounting, IP20, shield contacting with strain relief	PP-RJ-IDC	2703019	1
Patch panel, two RJ45 sockets, 10/100/1000 Mbps, DIN rail mounting, IP20, shield contacting with strain relief, shield current monitoring, surge protection	PP-RJ-RJ-F	2703020	1
Patch panel, RJ45 socket on screw terminal blocks, 10/100/1000 Mbps, DIN rail mounting, IP20, shield contacting with strain relief, shield current monitoring, surge protection	PP-RJ-SC-F	2703021	1
Patch panel, RJ45 socket on push-in terminal blocks, 10/100/1000 Mbps, DIN rail mounting, IP20, shield contacting with strain relief, shield current monitoring, surge protection	PP-RJ-SCC-F	2703022	1

Accessories	Type	Order No.	Pcs./Pkt.
Patch panel, RJ45 socket on IDC terminal blocks, 10/100/1000 Mbps, DIN rail mounting, IP20, shield contacting with strain relief, shield current monitoring, surge protection	PP-RJ-IDC-F	2703023	1
Crimping pliers, for assembling the RJ45 plugs FL PLUG RJ45..., for assembly on site	FL CRIMPTOOL	2744869	1
CAT5-SF/UTP cable (J-02YS(ST)C HP 2 x 2 x 24 AWG), heavy-duty installation cable, 2 x 2 x 0.22 mm^2, solid conductor, shielded, outer sheath: 7.8 mm diameter, inner sheath: 5.75 mm ± 0.15 mm diameter	FL CAT5 HEAVY	2744814	1
CAT5-SF/UTP cable (J-02YS(ST)C HP 2 x 2 x 24 AWG), heavy-duty installation cable, 2 x 2 x 0.22 mm^2, solid conductor, shielded, outer sheath: 7.8 mm diameter, inner sheath: 5.75 mm ±0.15 mm diameter, preassembled on both sides with RJ45 plug, crossover or line	FL CAT5 HEAVY CONF/	2744827	1
CAT5-SF/UTP cable (J-LI02YS(ST)C H 2 x 2 x 26 AWG), light-duty, flexible installation cable 2 x 2 x 0.14 mm^2, stranded, shielded, outer sheath: 5.75 mm ±0.15 mm diameter	FL CAT5 FLEX	2744830	1
CAT5-SF/UTP cable (J-LI02YS(ST)C H 2 x 2 x 26 AWG), light-duty, flexible installation cable 2 x 2 x 0.14 mm^2, stranded, shielded, outer sheath: 5.75 mm ±0.15 mm diameter, preassembled on both sides with RJ45 plug, crossover or line assignment	FL CAT5 FLEX CONF/	2744843	1
Passive network isolator for electrical isolation in Ethernet networks. This protects Ethernet devices from potential differences of up to 4 kV. Can be used for transmission speeds of up to 100 Mbps. Connection using RJ45 and COMBICON plug-in screw terminal block.	FL ISOLATOR 100-RJ/SC	2313928	1
Passive network isolator for electrical isolation in Ethernet networks. This protects Ethernet devices from potential differences of up to 4 kV. Can be used for transmission speeds of up to 100 Mbps. Possible to connect two RJ45 plugs.	FL ISOLATOR 100-RJ/RJ	2313931	1
Passive network isolator for electrical isolation in Ethernet networks. This protects Ethernet devices from potential differences of up to 4 kV. Can be used for transmission speeds of up to 1 Gbps. Possible to connect two RJ45 plugs.	FL ISOLATOR 1000-RJ/RJ	2313915	1
Passive network isolator for electrical isolation in Ethernet networks. For the protection of Ethernet devices against potential differences of up to 4 kV. Can be used for transmission speeds of up to 100 Mbps. Ethernet connection via two M12 sockets (D-coded).	FL ISOLATOR 100-M12	2902985	1
Patch cable, CAT5, assembled, 0.3 m	FL CAT5 PATCH 0,3	2832250	10
Patch cable, CAT5, assembled, 0.5 m	FL CAT5 PATCH 0,5	2832263	10
Patch cable, CAT5, assembled, 1 m	FL CAT5 PATCH 1,0	2832276	10
Patch cable, CAT5, assembled, 1.5 m	FL CAT5 PATCH 1,5	2832221	10
Patch cable, CAT5, assembled, 2 m	FL CAT5 PATCH 2,0	2832289	10

Accessories	Type	Order No.	Pcs./Pkt.
Patch cable, CAT5, assembled, 3 m	FL CAT5 PATCH 3,0	2832292	10
Patch cable, CAT6, pre-assembled, 0.3 m	FL CAT6 PATCH 0,3	2891181	10
Patch cable, CAT6, pre-assembled, 0.5 m	FL CAT6 PATCH 0,5	2891288	10
Patch cable, CAT6, pre-assembled, 1.0 m	FL CAT6 PATCH 1,0	2891385	10
Patch cable, CAT6, pre-assembled, 1.5 m	FL CAT6 PATCH 1,5	2891482	10
Patch cable, CAT6, pre-assembled, 2.0 m	FL CAT6 PATCH 2,0	2891589	10
Patch cable, CAT6, pre-assembled, 3.0 m	FL CAT6 PATCH 3,0	2891686	10
Patch cable, CAT6, pre-assembled, 5.0 m	FL CAT6 PATCH 5,0	2891783	10
Patch cable, CAT6, pre-assembled, 7.5 m	FL CAT6 PATCH 7,5	2891880	10
Patch cable, CAT6, pre-assembled, 10 m	FL CAT6 PATCH 10	2891877	10
Patch cable, CAT6, pre-assembled, 12.5 m	FL CAT6 PATCH 12,5	2891369	5
Patch cable, CAT6, pre-assembled, 15.0 m	FL CAT6 PATCH 15,0	2891372	5
Patch cable, CAT6, pre-assembled, 20.0 m	FL CAT6 PATCH 20,0	2891576	5
Stripping tool, for the multi-level stripping of shielded cables	VS-CABLE-STRIP-VARIO	1657407	1
RJ45 connector, degree of protection: IP20, number of positions: 8, 1 Gbps, CAT5 (IEC 11801:2002), material: PA, connection method: IDC fast connection, connection cross section: AWG 26- 23, cable outlet: straight, color: traffic grey A RAL 7042	VS-08-RJ45-5-Q/IP20	1656725	1
RJ45 connector, degree of protection: IP20, number of positions: 8, 1 Gbps, CAT5 (IEC 11801:2002), material: PA, connection method: IDC fast connection, connection cross section: AWG 26- 23, cable outlet: straight, color: black	VS-08-RJ45-5-Q/IP20 BK	1658008	1

4 Technical data

Supply	INJ 1000 INJ 1000-T INJ 1010 INJ 1010-T	INJ 1100-T INJ 1110-T
Supply voltage range	18 V DC ... 57 V DC	18 V DC ... 57 V DC
Protective circuit	Reverse polarity protection	Reverse polarity protection
Test voltage data interface/power supply		1.5 kV AC (50 Hz, 1 min.)

Ethernet interface, 10/100/1000Base-T(X) according to IEEE 802.3u		
	INJ 1000 INJ 1000-T INJ 1100-T	INJ 1010 INJ 1010-T INJ 1110-T
Connection method	RJ45 socket	RJ45 socket
Output power	30 W	60 W
Serial transmission speed	10/100/1000 Mbps	10/100/1000 Mbps
Transmission length	100 m (including patch cables)	100 m (including patch cables)
Connection line	twisted pair, shielded, CAT5 or better	twisted pair, shielded, CAT5 or better
Pin assignment	1:1	1:1

General data	
Degree of protection	IP20
Mounting position	vertical
Dimensions (W/H/D)	30 mm x 130 mm x 120 mm
Cable diameter	5.5 mm ... 6.5 mm
Housing material	Plastic gray
Vibration resistance in acc. with EN 60068-2-6/ IEC 60068-2-6	10 Hz ... 57 Hz, amplitude ±3.5 mm, 57 Hz ... 150 Hz, 5g
Shock in acc. with EN 60068-2-27/IEC 60068-2-27	25g for 11 ms, three shocks in each direction
Electromagnetic compatibility	Conformance with EMC Directive 2014/30/EU

Ambient conditions	INJ...	INJ...-T
Ambient temperature (operation)	0 °C ... 60 °C	-40 °C ... 75 °C
Ambient temperature (storage/transport)	-40 °C ... 85 °C	-40 °C ... 85 °C
Permissible humidity (operation)	10 % ... 95 % (non-condensing)	10 % ... 95 % (non-condensing)
Altitude	5000 m (for restrictions see manufacturer's declaration)	5000 m (for restrictions see manufacturer's declaration)

Approvals / Certificates	
Conformance	CE-compliant
Noxious gas test	ISA-S71.04-1985 G3 Harsh Group A

Conformance with EMC Directive 2014/30/EU		
Noise immunity according to EN 61000-6-2		
Electrostatic discharge	EN 61000-4-2	
	Contact discharge	± 6 kV (Test Level 3)
	Discharge in air	± 8 kV (Test Level 3)
	Indirect discharge	± 6 kV
	Comments	Criterion B
Electromagnetic HF field	EN 61000-4-3	
	Frequency range	80 MHz ... 3 GHz (Test Level 3)
	Field intensity	10 V/m
	Comments	Criterion A
Fast transients (burst)	EN 61000-4-4	
	Input	± 2.2 kV (1 minute)
	Signal	± 2.2 kV (1 minute)
	Comments	Criterion B
Surge current loads (surge)	EN 61000-4-5	
	Input	± 0.5 kV
	Signal	± 1 kV (Data line, asymmetrical) ± 2 kV (I/O cable on field side only, asymmetric)
	Comments	Criterion B
Conducted interference	EN 61000-4-6	
	Frequency range	0.15 MHz ... 80 MHz
	Voltage	10 V
	Comments	Criterion A

Emitted interference in acc. with EN 61000-6-4	
Interference emission	EN 61000-6-4 Class A, industrial applications
	EN 61000-6-3 Class B, domain of use: residential and small commercial

5 Safety regulations and installation notes

CAUTION:
Observe the following safety notes when using the device.

- Installation, operation, and maintenance may only be carried out by qualified electricians. Follow the installation instructions as described.
- When installing and operating the device, the applicable regulations and safety directives (including national safety directives), as well as general technical regulations, must be observed. The technical data is provided in this package slip and on the certificates (conformity assessment, additional approvals where applicable).
- The device must not be opened or modified. Do not repair the device yourself, replace it with an equivalent device. Repairs may only be carried out by the manufacturer. The manufacturer is not liable for damage resulting from violation.
- The IP20 protection (IEC 60529/EN 60529) of the device is intended for use in a clean and dry environment. The device must not be subject to mechanical strain and/or thermal loads, which exceed the limits described.
- The device is designed exclusively for SELV operation according to IEC 60950-1/EN 60950-1/VDE 0805. The device may only be connected to devices, which meet the requirements of EN 60950-1.

6 Product description

Product variants					
Order No.	**Designation**	**Power**	**Port 2**	**Temperature range**	**Function**
2703005	INJ 1000	30 W	RJ45 socket	0 °C ... 60 °C	
2703006	INJ 1000-T			-40 °C ... 75 °C	
2703007	INJ 1010	60 W		0 °C ... 60 °C	
2703008	INJ 1010-T			-40 °C ... 75 °C	
2703009	INJ 1100-T	30 W			Electrical isolation
2703010	INJ 1110-T	60 W			
The following product versions with advanced functions are described in a separate data sheet:					
2703011	INJ 2101-T	30 W	Screw terminal blocks	-40 °C ... 75 °C	Potential separation, surge protection and shield current monitoring
2703012	INJ 2102-T		IDC terminal blocks		
1004065	INJ 2103-T		Push-in terminal blocks		
2703013	INJ 2111-T	60 W	Screw terminal blocks		
2703014	INJ 2112-T		IDC terminal blocks		
1004066	INJ 2113-T		Push-in terminal blocks		

6.1 Dimensions

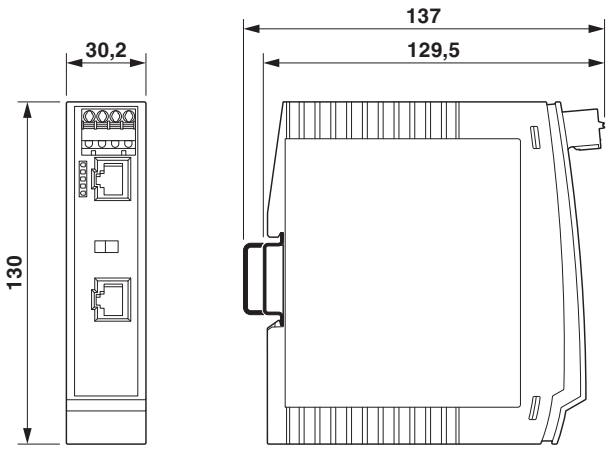

Figure 1 Dimensions

6.2 Function elements

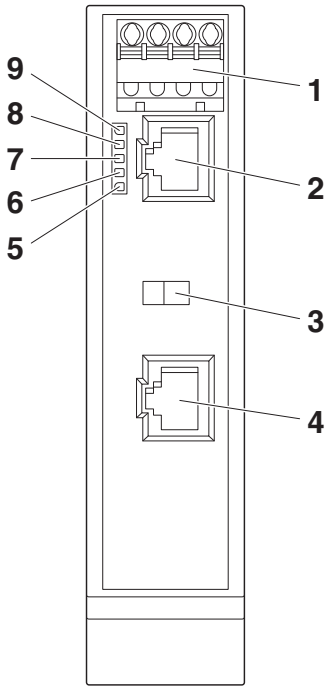

Figure 2 Function elements

1	US1	GND	18 V DC ... 57 V DC	
	US2	GND	Redundant supply voltage	
2	RJ45 socket		Data	
3	DIP switch			
4	RJ45 socket		Data + PoE	
5	LED	No function		
6	LED	S2	Status Mode B	Spare Pair
7	LED	S1	Status Mode A	Data cable
8	LED	U2	Supply voltage US2	
9	LED	U1	Supply voltage US1	

6.3 Setting the DIP switches

INJ 1000, INJ 1000-T

DIP	ON	OFF (default)
1	Mode B wires 4, 5, 7, 8	Mode A wires 1, 2, 3, 6
2	not connected	

INJ 1010, INJ 1010-T, INJ 1100-T, INJ 1110-T

DIP	ON	OFF (default)
1	back-off	back-off disabled
2	4 pairs	2 x 2 pairs

7 Installation

7.1 Assembly

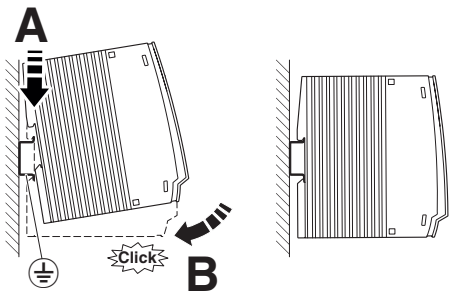

Figure 3 Mounting on a DIN rail

The device is intended for installation in a control cabinet.

- Connect a 35 mm EN DIN rail to the protective earth via a grounding terminal block. The device is grounded by snapping it onto the DIN rail.
- Snap the device onto the DIN rail.

7.2 Removal

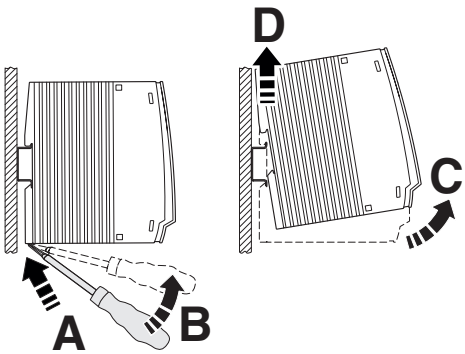

Figure 4 Removal

- Push down the locking tab with a screwdriver, needle-nose pliers or similar.
- Slightly pull the bottom edge of the device away from the mounting surface.
- Pull the device away from the DIN rail.

7.3 RJ45 interface

NOTE: Interference

Only use shielded twisted pair cables and corresponding shielded RJ45 connectors.

- Only twisted pair cables with an impedance of 100 Ω can be connected to the RJ45 Ethernet interface.
- Insert the Ethernet cable with the RJ45 plug into the TP interface until the plug engages audibly. Observe the plug keying.

7.4 Power supply voltage

- Connect the supply voltage to US1 and GND.
- Optionally, you can connect a redundant supply voltage to US2 and GND.

There is no reverse polarity protection for >50 V DC redundant feed-in.

8 Troubleshooting

Guideline IEEE 802.3bt for end devices with an electrical power requirement greater than 30 W has not yet been published. For this reason, the injector and end device may not be able to negotiate the electrical power requirements autonomously in rare cases.

- Check the cabling.
- Try a different setting of the DIP switches.

Contact Phoenix Contact when these measures do not help.

Keep the documentation of your end device ready.

9 Derating (INJ 1100-T and INJ 1110-T only)

Derating only occurs in the product versions with electrical isolation.

30 W

– 30 W, row installation: derating from 65°C

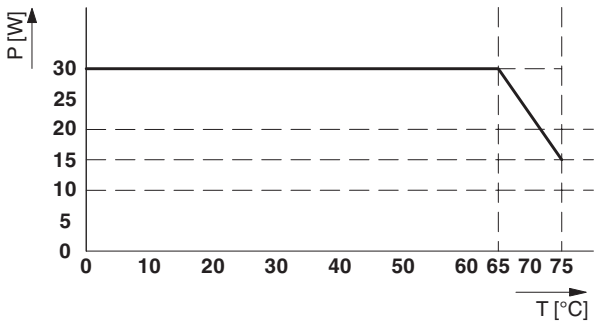

60 W

– 60 W, free standing: derating from 70°C

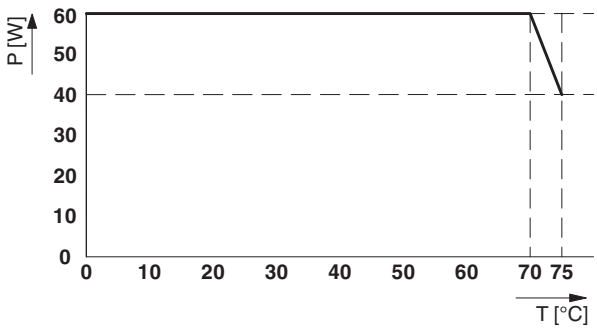

– 60 W, row installation: derating from 45°C