名 称(Part Name)： 后倾式离心风机 Backward curved centrifugual Fan

型 号(Model No.)： R40137E-38L-B43/D000

顾客代码(Customer Code)： D000

版 次(Version No.)： A/1

编 制 (Prepared)： 佘丽华

校 对 (Checked)： 郝玉成

批 准 (Approved)： 叶国洲

客户确认/日期（Customer Approval/Date）

换版记录 Description of Revision

版本号 No.	换版原因 Notes & Remarks	换版内容 Contents	修订人 Revised by	日期 Date
A/1	/	/	/	/

1.0 概述/ Introduction

本规格书主要描述了产品标准、使用环境、技术要求等.

This specification describes the standards, operatiing environment, and technic requirements of the product.

2.0 产品标准和安规要求/Requirements of product standards and safety regulations

2.1本产品符合的标准 / The product satisfy requirements

2.1.1 GB12350《小功率电动机的安全要求》

GB12350《Safety requirments of small power motors》

2.1.2 GB/T13275《一般用途离心通风机通用技术条件要求》

GB/T13275 《General technical requirements for general centrifugal fan》

2.1.3 EN60335-1《家电和类似用途电器的安全要求》

EN60335-1 《Safety requirements of household and similar electrical appliances》

2.2 本产品通过 CCC、CE认证.

The fan is CCC, CE approved.

2.3 本产品全部材料符合RoHS要求

All materials are RoHS compliant.

3.0 机械要求/ Mechanical requirements

3.1 外形图/Dimensioned drawing

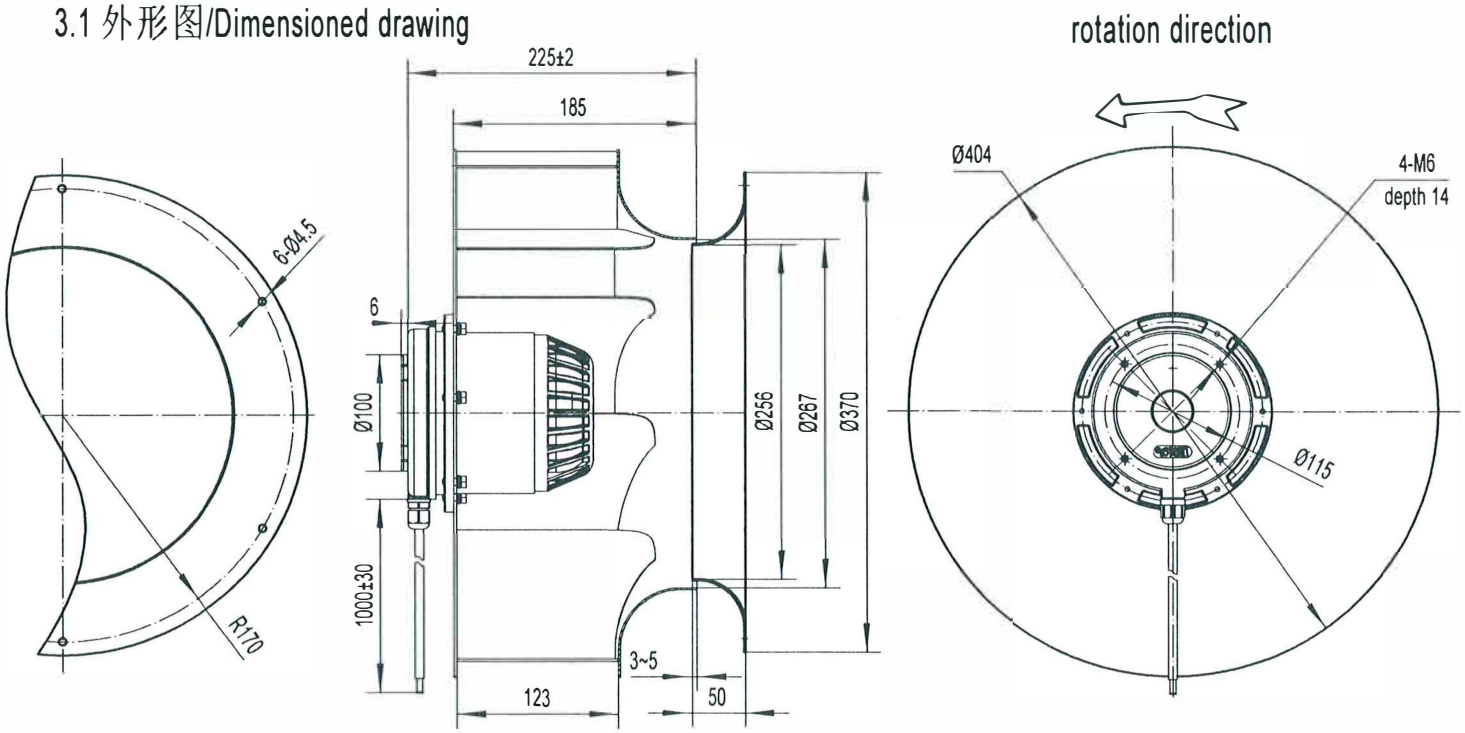

3.2 材质/Materials

转子铸铝;风轮铝合金

Rotor: Aluminum Casting;Impeller:sheet aluminum

3.3 电机/Motor

外转子交流电机/ External rotor AC motor

3.4 电机型号/Motor type

YWM137-050-24-4T-AF0

3.5 轴承/ball bering

免维护滚珠球轴承/ Maintenance free ball bering

3.6 平衡/Balancing

风机在额定电压和频率下运转时，每个端面动平衡精度不低于G6.3，符合标准JB/T9101 。
The residual unbalance weight is less than the permit value of G6.3 (balancing precision grade, according to the standard of JB/T9101) when the fan is runningt at rated voltage and frequency.

3.7 振动/Vibration of the fan

风机振动速度有效值按照JB/T8689标准规定。
Vibration speed virtual value of fans accord with JB/T8689。

3.8 跳动/ Runout of impeller

风轮轴向、径向跳动 ≤2.0mm。
Runout of impeller in axial and radial direction ≤2.0mm.

3.9 寿命/Life time

风机寿命估算值20000小时，（在额定电压、环境温度为40℃、额定转速）
The designed lifespan of the fan is 20000 hours assuming the fan is running at rated voltage, rated speed and 40 degrees C environmental temperature.

3.10 产品净重/Net Weight

Net weight: 10 Kg

4.0 风机性能/Fan performance

4.1 性能参数/Performance data

额定电压/ Voltage[V]	频率/ Frequency[Hz]	电容/ Capacitor[μ F] (±5%)	输入电流/ Current draw [A] (±10%)	输入功率/ Power input[W] (±10%)	转速/ Speed[r/min] (±10%)	风量/ Air flow/(0Pa) [m3/h](±10%)	噪音/ Noise level [Lp dB(A)]
380/400	50	/	0.8	510	1370	4400	66

4.2 特性曲线/Performance curve(s)

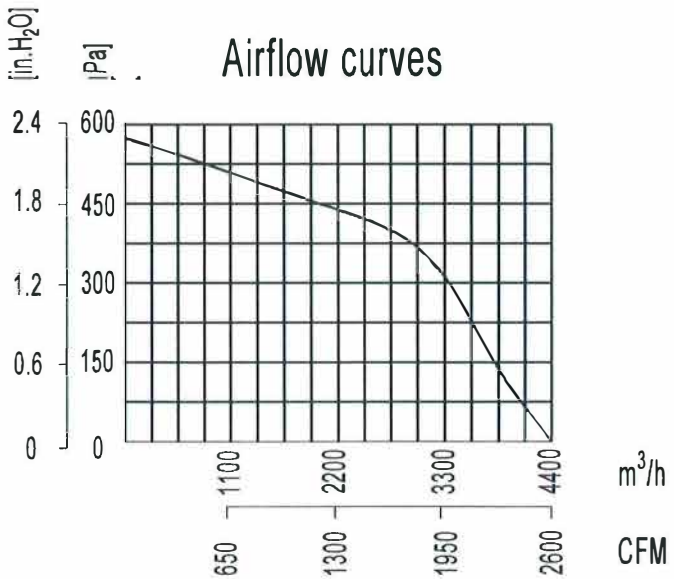

5.0电气性能/Electrical performance

5.1铭牌/Label (选中请打勾/Please tick at your choise）

☐中文/chinese

☐英文/english

5.2接线图/Wiring diagram(选中请打勾/Please tick at your choise）

☐中文/chinese

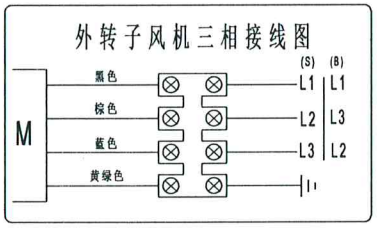

☐英文/english

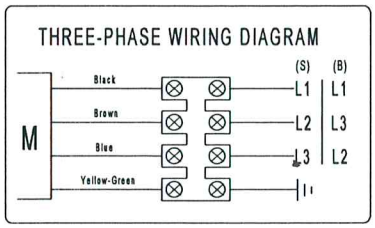

5.3 电压范围/Voltage range

风机设计的额定运行电压为380/400V，可运行的电压范围是342～418V，
The fan is designed to operate at a nominal voltage of 380/400V, but it can be operated in the range of 342-418V

5.4 保护/Protection

电机有热保护功能, 断开温度:150—160℃,复位温度:90—120℃
This motor has overheated protection function, cut off temperature is between 150—160℃ and reset temperature is between 90—120 ℃.

5.5 防护等级: IP 54

Protection Class: IP54

5.6 绝缘等级：F

Insulation Class: F

5.7 工作制/Type of Application

■S1 ☐S2 ☐其他/Other

5.8 安装方式/ Installation Mode

☐水平/Horizontal ☐垂直/Vertical ■其他/Other

5.9 调速方式/Mode of speed regulation

☐斩波/PWM ☐变频/VFD ☐抽头/By Wiring ☐电容/Capacitor ☐无极调速/Stepless ■无/NA

6.0质量要求/Quality Requirements

质量要求符合ISO9001:2000和企业标准.
Quality requirements accord with ISO9001:2000 and Sanding's quality standards.

7.0 使用和存储环境/ Operating and storaging environmental requirements

7.1 使用环境/ Operating environmental requirements

使用温度范围/Operating temperature range: -30℃～+60℃

使用湿度范围/Operating humidity range: 0%～90% RH

海拔高度/Operating altitude: ≤1000m

7.2 贮存环境/Storaging environmental requirements

贮存温度范围：-10℃～+40℃ , 贮存湿度范围: 0%～75% RH。

Storaging temperatures range: -10℃ ~ +40℃; Storaging humidity range: 0% ~ 75% RH.

8.0 包装和标识/ Packaging and marks

8.1 包装/Packaging

纸箱包装/Carton packaging

8.2 标识/Marks

制造商名称、产品型号、重量、尺寸等

Markings: Name of manufacturer, fan model , date of production, weight, dimensions, etc.

9.0 附件/Other requirements on accessories

9.1 电容/Capacitor

□带/Yes, ■不带/No, □根据销售订单配备/As per sales' requirement.

9.2 连接件要求/Connector

连接器/Connecter(□有/Yes，■没有/No) 型号/Modle:

端子/Terminal(□有/Yes，■没有/No), 型号/Modle: