北京三鼎中天科技有限公司

客户（CUSTOMER）

品名（DESCRIPTION） DC Brushless Fan

型号（MODEL） D1511N-01W-B08

单号（PARTNO） F300

送样数量（ATTACHED） 2 PCS

提出日期（DATE ） 2015 年 06 月 17 日

版本（EDITION） A1

客户承认签章 CUSTOMER APPROVED	

ADD：河北省三河市燕郊经济开发区百世金谷二期W1-Q
TEL：010-80843596 FAX：010-80843958-8031
Website：www.cnecport.com

敬请“客户承认签章”栏签核后将承认书回传风之源公司，以便后续作业，谢谢！

审核 APPROVED	确认 CHECKED	制作 PREPARED
2016-06-17	2016-06-17	2016-06-17

1.General Specification

项目 Item	描述 Description	测试条件 Condition
1-1. 外形尺寸 Dimension	40x40x28mm	
1-2. 轴承 Bearing Type	双滚珠轴承 Two Ball Bearing	
1-3. 额定电压 Rated Voltage	DC5 V	
1-4. 操作电压 Operating Voltage	DC3.5V~5.5V	
1-5. 启动电压 Start-up Voltage	3.5 V	25℃ Power ON/OFF
1-6 额定电流 Rated Current Current	0.2A	A.At Rated Voltage B.25℃ C.65%RH D.Measured after 5minutes
1-7. 额定功率 Rated Power Power	1.00 W	
1-8. 额定转速 Rated Speed	8000rpm/min±10%	
1-9. 最大风量 Max. Air Flow	11.82 CFM	A.PQ Measurement Apparatus B.Standard: AMCA C.Rated Voltage D.Rated Current
	20.09 m^3/H	
1-10. 最大静压 Max.Static Pressure	8.45 mm-H_2O	
	0.33 inch-H_2O	
1-11. 噪音 Noise level	33.95 dBA	A.Rated Voltage B.Mute Room C.Distance:1M D.Background Noise: <18dB
1-12. 寿命预估 Life Expectance	50000hrs at 40℃ 相对湿度 15%～65%RH	E.L10 Failure Criteria: F.A.Speed:Under15% of original value G.B.Current:Over15% of original value H.C. Fan not run
1-13. 马达极数 Pole	4 Poles	
1-14. 旋转方向 Rating Direction	Anticlockwise	From the blades side
1-15.其他特点Other Features	Tachometer Output 测速计输出	○
	Lock Rotor Alarm 锁定报警	○
	LD Rotor Alarm 寿命告警	○
	Auto start 自动重启	○
	Soft Start 软启动	○
	Speed Control Mode 速度控制模式	○
	Protection level 防护等级	○

2.Electrical Specification

项目 Item	条件 Condition
2-1.锁定扇叶保护功能 Locked Rotor Protection	○安规条件 Safety Condition
	额定电压下风扇被锁定 1-3 秒时，自动断电，并在 2 至 6 秒内自动尝试启动，锁住扇叶 72 小时无损坏。Auto power off after locked at rated voltage for 1-3sec. And then circuit attempt to restart in 2 to 6 sec，There is no damage after 72hours locking。
2-2.极性保护 Polarity Protection	Vcc 与 GND 反接时，不导通 Open circuit when Vcc&GND are exchanged
	○ Vcc 与 GND 反接时，5 秒内不烧毁 Circuit won't be burned within 5seconds when Vcc&GND are exchanged
2-3.绝缘阻抗 Insulation Resistance	At least 10MΩ at 500 VDC between housing and both lead wires
2-4.绝缘耐压 Dielectric strength	Withstand 500 VAC 1 minute 1mA between housing and both lead wires

3.Specification of Main Material

3-1.外框材质 Frame	PBT UL94V-0
3-2.扇叶材质 Propeller	PBT UL94V-0
3-3.绝缘架 Bobbin	PBT UL94V-0
3-4.导线 Lead wires	Red(+),Black(-) UL1007#26AWG, 150±5mm
3-5.端子 Connector	None
3-6 商标 Lable Marking	型号/Model No D1511N-01W-B08 额定电压/Rated Voltage：DC 5 V 安规电流/Rated Current： 0.22A

4.Environmental Specification

项目 Item	条件 Condition
4-1.运转温度，湿度范围 Operating Temp. Humidity Range	Temperature: -10~+80℃
	Humidity :15%~90%RH
4-2.保存温度，湿度范围 Storage Temp. Range	Temperature: -20~+85℃
	Humidity :15%~90%RH

5.有害物质含量声明 The criteria of content of fan's material as below:

Seq.	Material/Substance	Standard Reference	Content Criteria
1	Pb	ROHS	<1000ppm
2	Hg	ROHS	<1000ppm
3	Cd	ROHS	<100ppm
4	Cr VI	ROHS	<1000ppm
5	PBB	ROHS	<1000ppm
6	PBDE	ROHS	<1000ppm

6. Noise Test（噪音测试）

测试条件 Test Condition	测试方法 Test Method
1.温度 Temperature: 25 ℃	1.测试位置 Test Postion: 180°
2.湿度 Humidity: 62 %RH	2.测试距离 Test Distance: 1.0M From the fan intake
3.额定电压 At Rated Voltage:5V DC	
4.额定转速 At Rated Speed: 8000 RPM	3.背景噪音 Background Noise: 14.56dB(A)
	4.测试依照标准 ISO3745执行 This test executes to ISO3745 standard
测试设备 Test Equiprment: AW6269双通道噪音频谱分析仪 AW6269 double channels noise Spectrum Analyzer	
测试结果 Test Result: 噪音:33.95分贝; Leq:33.95dB(A)	

6-1.噪音测试方法示意图（Schematic diagram of noise test method）:

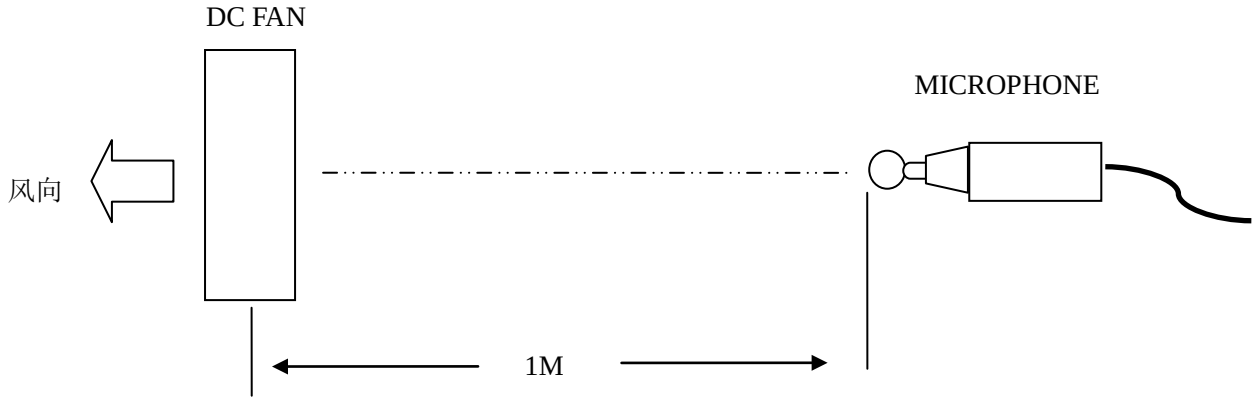

7.尺寸图 Dimension Drawing

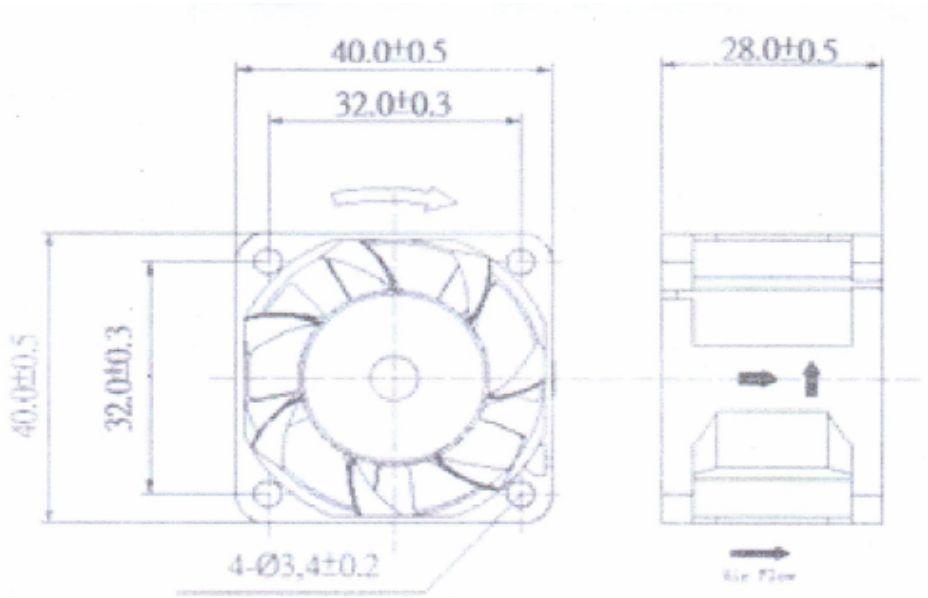

Note:

8-1. 使用时请勿超出本规格所规定之极限，否则我们不保证此产品。

We will not guarantee the products if the application of our products are exceeded the limitation which is specified on this specification.

8-2.倘若要变更此份文件的任何规格，请务必事先提出需求。

In case of changes of the specification specified on this document.A written notice is requested in advance.

8-3.请勿触压着叶片以及电源线缠绕着风扇或用用拉扯电源线，如此轴心与电源线将会被损毁。

Please do not touch the impeller with the pressure and never bring the fan with lead wire.The bearing and lead wire may be damaged.

8-4. 本产品不保证因粉尘、水滴、小虫进入，而影响寿命与不良品产生。

No guarantee on the products against the safety problem or failure caused by powder dust, drop of water or insect.

8-5.如有任何资料及文件与此份资料不同，将以此份资料为主要参考。

If there is any data or related documentation different from this data sheet.This data sheet is the principle reference.

8-6.请勿在可燃性气体与任何有害环境中使用。

Please do not use the fan in the environment of corrosive gas or liquid or any detrimental gas.

8-7.组装风扇时，请特别注意，因共振或振动产生的噪音。

During the installation of the fan, please pay substantial attention to possible notice caused by resonance vibration and shock.

8-8.当搬运或作业中，风扇如从 60cm 的高度落下，将会对叶片的平衡产生若干影响，特别是滚珠轴承避免掉落。

It is very important to notify that avoid to drop from 60cm height when in any movement or operation,it will impact the balance of blade. Especially ball bearing structure is avoided to drop down.

8-9.锁外壳之螺丝扭力不得超 4Kgf。

The torque of the screw which locked the frame should not exceed 4 Kgf.

8-10.当风扇在运转时，请不要触摸叶片，这样非常危险，容易伤害到您的手指。

Please don’t touch the blade when the fan at full speed running , be careful your fingers!