MICRO SWITCH
FREEPORT, ILLINOIS, U.S.A.
A DIVISION OF HONEYWELL
FED. MFG. CODE 91929

PACKET

CATALOG LISTING
6PA2

THIS DRAWING COVERS A PROPRIETARY ITEM AND IS THE PROPERTY OF MICRO SWITCH, A DIVISION OF HONEYWELL. THIS DRAWING IS NOT TO BE COPIED OR USED WITHOUT THE APPROVAL OF MICRO SWITCH.

6PA2

REPLACES

RELEASE NO.

M

DRAWING NUMBER

ISSUE 6

CHECK

REVISIONS

A	CO 13082	O M W 16 MAR 80
B	CO-77179-D	J J O 12 MAR 94
C	C081513B	J A K 12 MAR 97

CHECK

21JAN81

CHECK CLH

CHECK

DRAWN T M M 19 JAN 81

FORMTEK

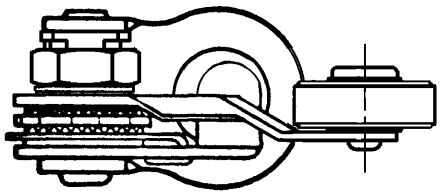

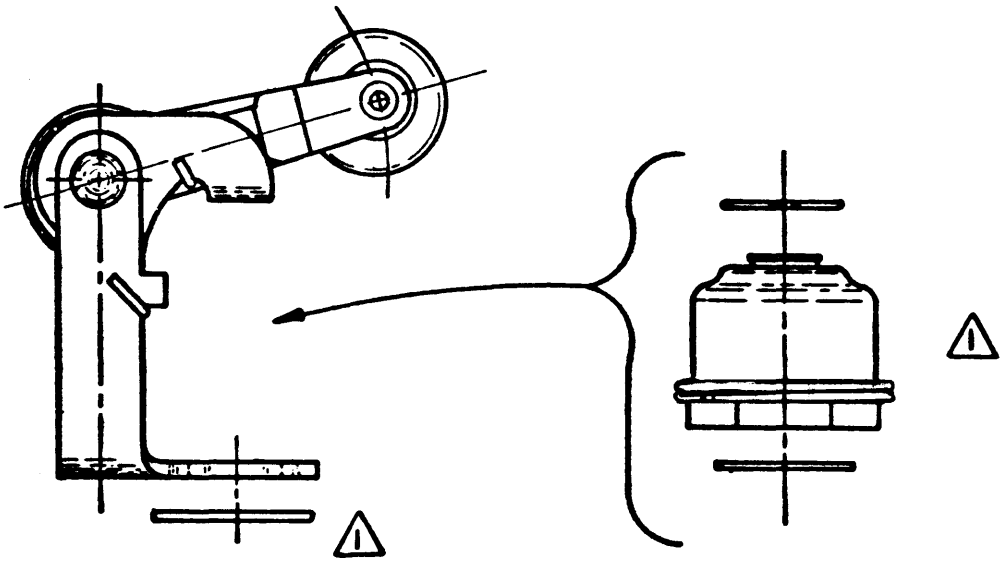

NOTE
1 PARTS SUPPLIED UNASSEMBLED IN BULK AS A PACKET