TRIM TRIO® screw termination contacts

Description

UTS, part of the well-known TRIM TRIO® interconnection system

UTS series with screw termination contacts combines extreme sealing performance, rapid & secure connector mating with the ease of wire termination.

It requires no special skills or tools. Only a standard screwdriver is needed to fit the wires to the contacts, making it incredible user-friendly and suitable for any field installation.

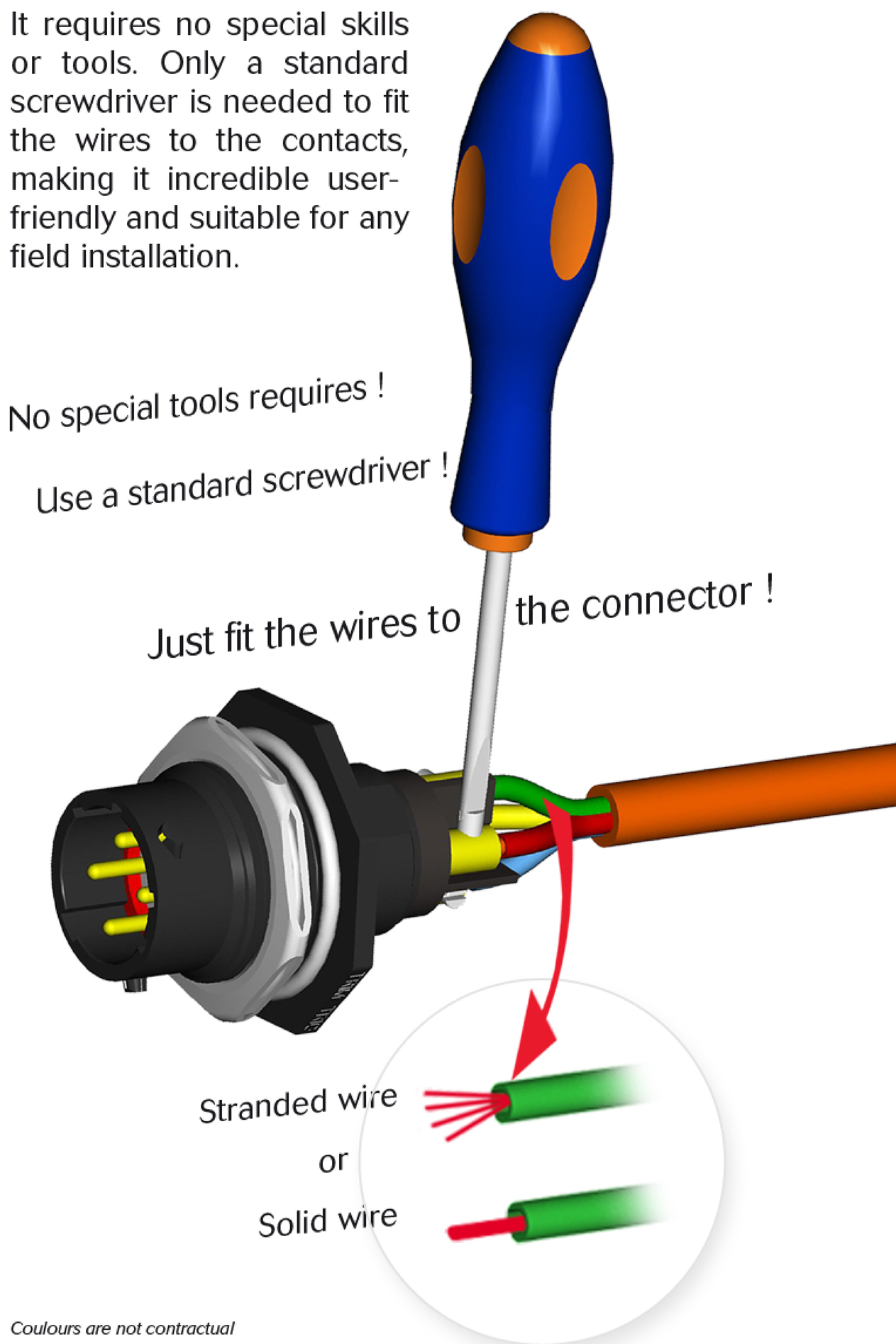

Coulours are not contractual

Features

- Only a standard screwdriver is needed to fit the wires to the contacts
- Contact accepting a wide range of wires
- Rapid mating with 1/3 turn with an audible & sensitive "click"
- Dynamic IP68/69K water protection
- Rapid & secure mating - min 250 mating cycles
- High salt spray resistance
- Male connectors have a grounding contact
- RoHS compliant

Applications

- Tunnel fans
- Videosurveillance
- Traffic control
- Parking detection systems
- Meteorological measurement systems

and there is more

UTS with screw contact termination is perfect for field installation

UTS : your first choice in waterproof connectors !

SOURIAU
Connection Technology

TRIM TRIO® screw termination contacts

Technical characteristics

Mechanical

• Durability	250 cycles
• Thermal shock	Per MIL-std 1344 method 1003
• Screw tightening torque	40 Ncm

Electrical

• Current rating	13 Amp
• Insulation resistance	5000 MΩ min
• Test potential	2000 Vac
• Wire acceptance	0.5mm² to 2.5mm²
• Rated voltage per ***VDE0110*** (IEC 60664-1)	320 V class III, PD 2
• Rated voltage per UL1977 type 2	500 V

Environmental

• Operating temperature	from -40°C to +105°C
• Flammability rating	UL94V0 and NFF16102 level 2
• Sealing (mated)	Dynamic IP68/69K
• UV resistant	Sun and moisture as per ISO 4892
• Salt spray resistance	500 hours

Material

• Connectors + backshells	Thermoplastic
• Contacts	High conductive copper alloy Min 0.4µm gold plating
• RoHS compliant	

RoHS Compliant

Connector accommodation

UTS connectors with screw termination contacts are fully intermateable and interchangeable with the UTS crimp and solder versions. (refer to UTS catalog or www.souriau.com).

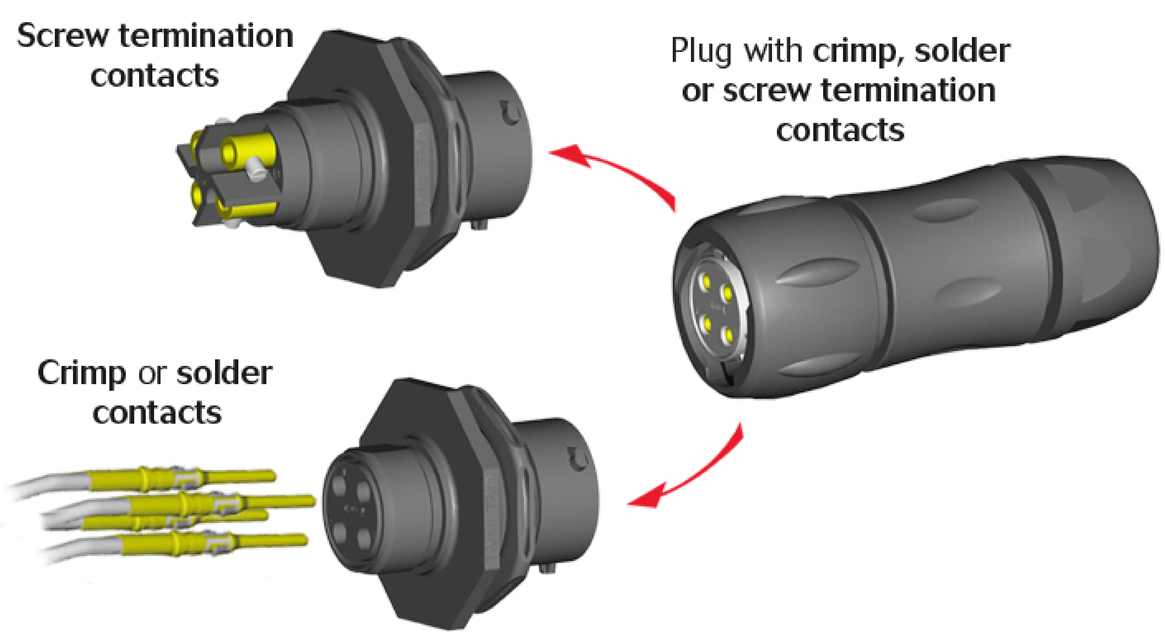

Available arrangements

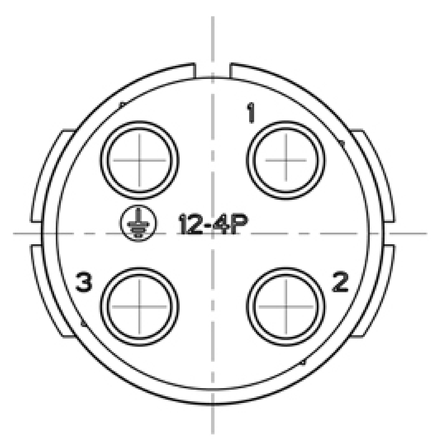

Size 12-4
3 + Grounding

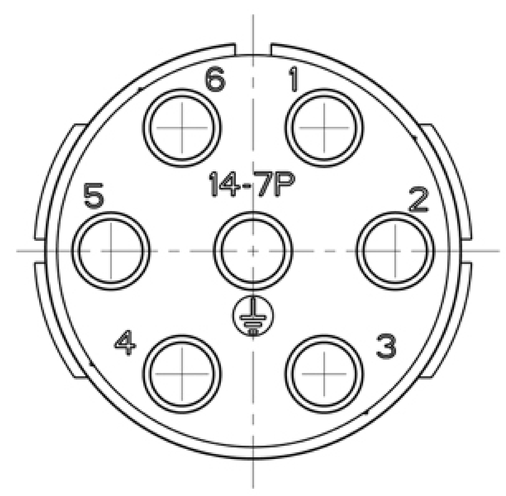

Size 14-7
6 + Grounding

TRIM TRIO® screw termination contacts

Range presentation

Plug

UTS6JC124PSCR (male)
UTS6JC124SSCR (female)

UTS6JC147PSCR (male)
UTS6JC147SSCR (female)

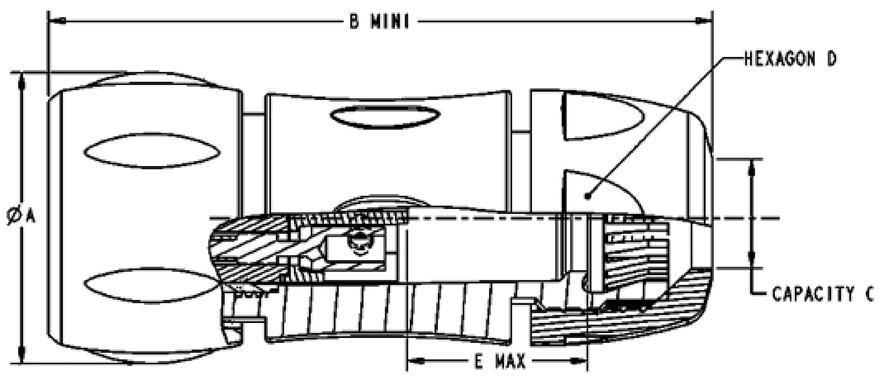

Shell size	12	14
Layout	4 (3+1)	7 (6+1)
ØA	29.7	34.6
B min.	66.7	71.5
Capacity C / Standard	5.0/12.0	7.0/14.0
Capacity C / Reducing seal	3.0/9.0	5.0/12.0
Hexagon D	24.0	26.0
E max. (female)*	21.0 max	18.0 max

** Shell size 12 & 14*
Note : all dimensions are in mm

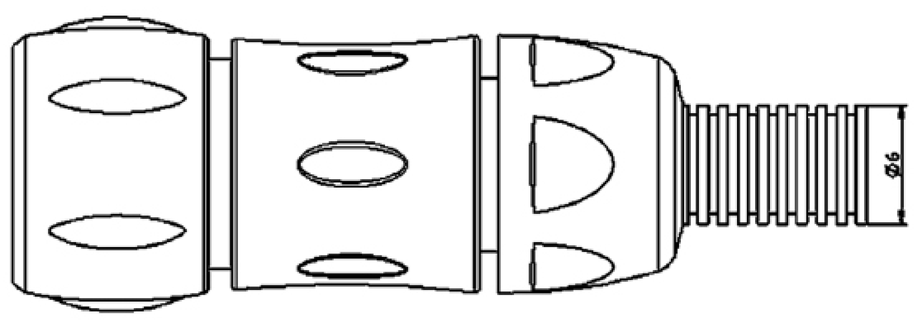

The standard plug and In-line receptacle (see below) can be fitted with a flexible conduit - not delivered by SOURIAU.

For all other requests, please consult the factory.

Jam nut receptacle

UTS7124PSCR (male)
UTS7124SSCR (female)

UTS7147PSCR (male)
UTS7147SSCR (female)

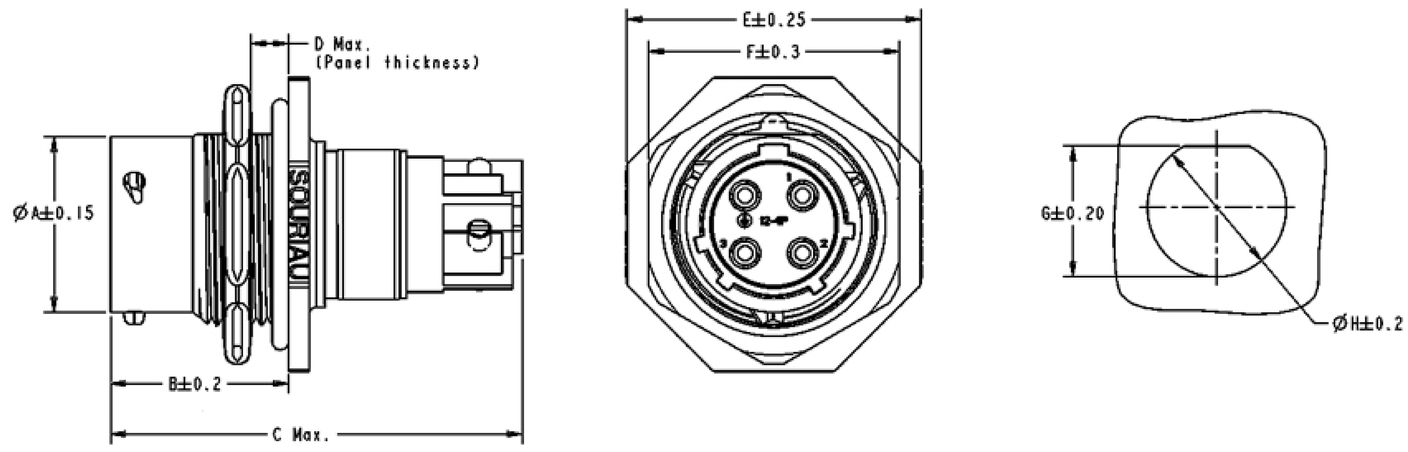

Shell size	Layout	A	B	C max	D max	E	F	G	H
12	4 (3+1)	19.0	19.3	46.5	3.2	31.8	27.0	21.2	22.5
14	7 (6+1)	22.2	19.3	52.5	3.2	34.9	30.2	24.3	25.7

Note : all dimensions are in mm

In-Line receptacle

UTS1JC124PSCR (male)

UTS1JC147PSCR (male)

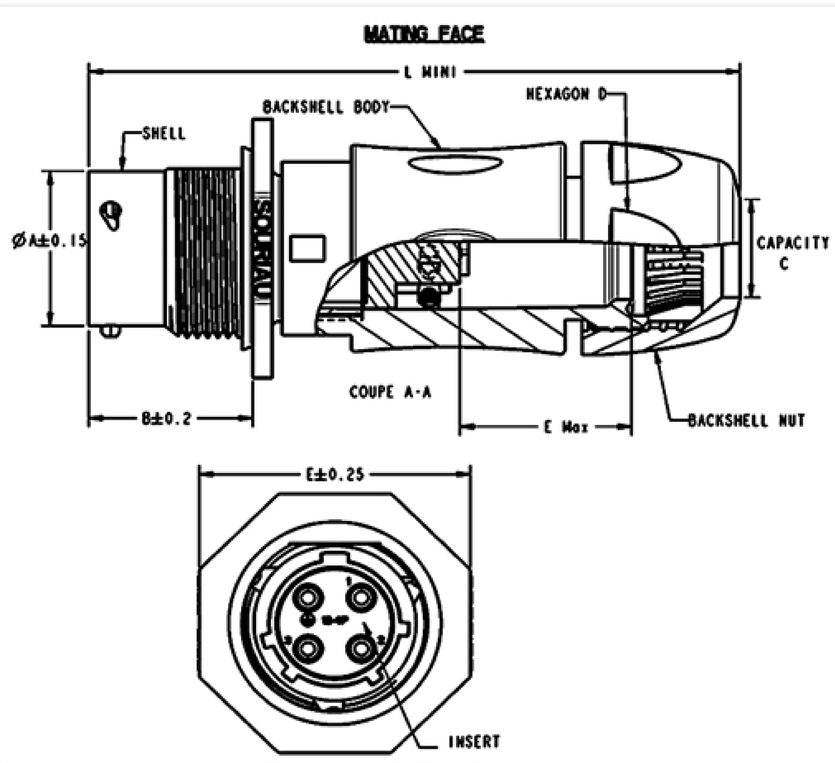

Shell size	12	14
Layout	4 (3+1)	7 (6+1)
ØA	19.0	22.2
B	19.3	19.3
L mini	76.0	81.0
E	31.8	34.9
Capacity C / Standard	5.0/12.0	7.0/14.0
Capacity C / Reducing seal	3.0/9.0	5.0/12.0
Hexagon D	24.0	26.0
E max. (male)*	22.0 max	22.0 max

** Shell size 12 & 14*
Note : all dimensions are in mm

TRIM TRIO® screw termination contacts

Ordering information

Connector family		Receptacle	UTS	7	-	12	4	P	SCR
		Plug	UTS	6	JC	12	4	S	SCR
		In line	UTS	1	JC	12	4	P	SCR
Body variation	**7** : Jam nut receptacle **6** : Cable plug **1** : In line receptacle								
Backshell	**JC** : IP68/69K backshell (only plug + free hanging)								
Shell size	**12** or **14**								
Number of contacts	**4** or **7**								
Type of contacts	**P** : male **S** : female								
Contact termination	**SCR** : Screw termination								

Accessories

Receptacle sealing cap

Part numbers :
Size 12 : UTS12DCG
Size 14 : UTS14DCG

Plug sealing cap

Part numbers :
Size 12 : UTS612DCG
Size 14 : UTS614DCG

Colour coding rings

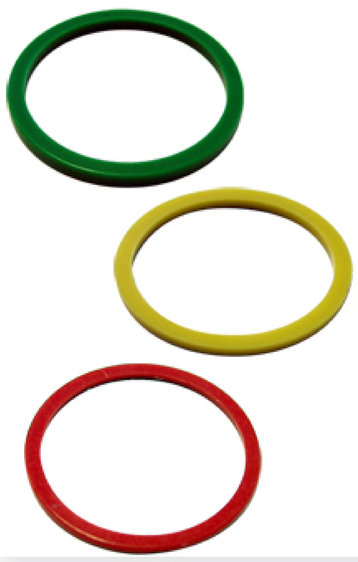

Part numbers for receptacle:
Size 12 : UTS712CCR*
Size 14 : UTS714CCR*
* Add G for Green, Y for Yellow, Ro for Red

Part numbers for plug:
Size 12 : UTS612CCR*
Size 14 : UTS614CCR*
* Add G for Green, Y for Yellow, Ro for Red

UTS : your first choice in waterproof connectors !

SOURIAU
Connection Technology

For further information, visit our web site www.trimtrio.com,
or contact us at contactindustry@souriau.com