ORIGINAL INSTRUCTIONS

PROPER USE GUIDELINES

Cumulative Trauma Disorders can result from the prolonged use of manually powered hand tools. Hand tools are intended for occasional use and low volume applications. A wide selection of powered application equipment for extended-use, production operations is available.

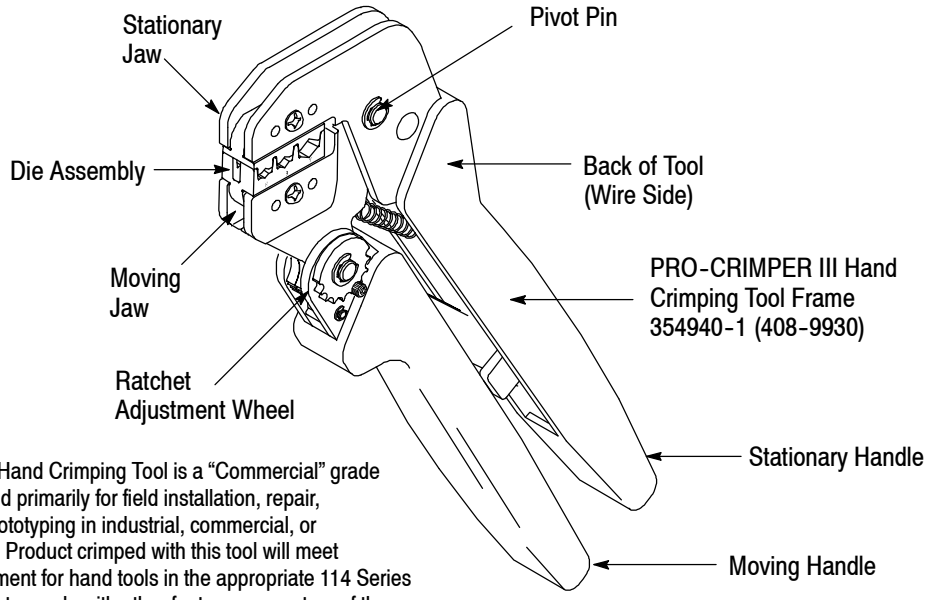

The PRO-CRIMPER III Hand Crimping Tool is a "Commercial" grade hand tool and is designed primarily for field installation, repair, maintenance work, or prototyping in industrial, commercial, or institutional applications. Product crimped with this tool will meet the crimp height requirement for hand tools in the appropriate 114 Series Specification, but may not comply with other feature parameters of the specification. A variety of tools are offered to satisfy your performance requirements. For additional information, contact the Tooling Assistance Center at 1-800-722-1111.

Product		Wire		
Family	Insulation Color	Size (AWG)	Maximum Insulation Diameter (mm [in.])	Strip Length Range (mm [in.])
PIDG* Terminal or PLASTI-GRIP* Terminal	Red	22-16	3.56 [.140]	5.15-5.95 [.203-.234]
	Blue	16-14	4.32 [.170]	5.15-5.95 [.203-.234]
	Yellow	12-10	6.35 [.250]	7.94-8.73 [.312-.344]
PIDG FASTON* Terminal	Red	22-18	3.56 [.140]	8.33-9.14 [.328-.360]
	Blue	16-14	4.32 [.170]	

Note: Refer to Catalogs 82004 and 82042 for terminal selection information.

Figure 1

1. INTRODUCTION

PRO-CRIMPER III Hand Crimping Tool Assembly 58433-3 consists of PRO-CRIMPER III Hand Crimping Tool Frame 354940-1 and Die Assembly 58423-1. The tool assembly is used to crimp the terminals listed in Figure 1 . For additional information on the hand tool frame, refer to 408-9930. Read these instructions thoroughly before using the tool assembly.

Reasons for reissue of this instruction sheet are provided in Section 9, REVISION SUMMARY.

NOTE

Dimensions in this instruction sheet are in millimeters [with inches in brackets]. Figures are not drawn to scale.

CAUTION

Terminals crimped with Tool 58433-3 or with Die Assembly 58423-1 are not Listed by Underwriters Laboratories Inc. (UL) or CSA International.

©2011 Tyco Electronics Corporation, a TE Connectivity Ltd. Company
All Rights Reserved
TE logo is a trademark.
*Trademark. Other product names, logos, or company names might be trademarks of their respective owners.

2. DESCRIPTION

The tool frame features a stationary jaw and handle, a moving jaw and handle, and an adjustable ratchet that ensures full crimping. The tool frame holds the die assembly. See Figure 1.

The die assembly consists of an anvil and indenter. When closed, the dies form three crimping chambers. The indenter is marked with the letters R, B, and Y which correspond with the color of the terminal insulation (red, blue, or yellow). Die retaining screws are used to secure the dies in the tool frame. See Figure 2.

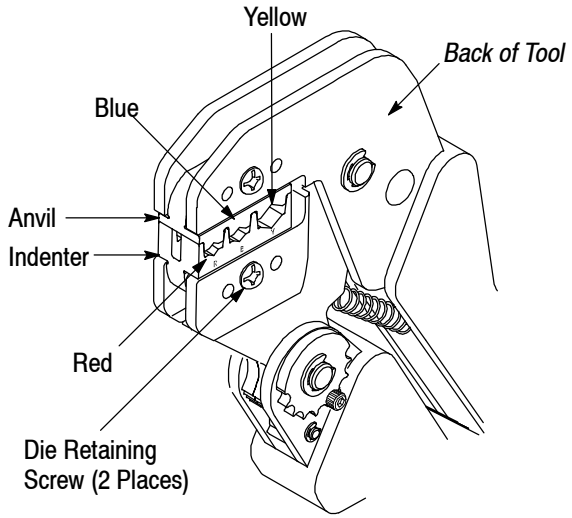

Figure 2

3. INSTALLATION AND REMOVAL OF DIE ASSEMBLY

1. Close the tool handles until the ratchet releases, then allow the handles to open fully.

NOTE

The ratchet has detents that create audible clicks as the tool handles are closed.

2. Remove the two die retaining screws and die retaining pins (pins will not be used for this die assembly) from the tool jaws.

3. Place the anvil in the moving jaw so that the marked surface faces outward. Insert the die retaining screw through the hole of the moving jaw and hole of the anvil, and tighten the screw just enough to hold the anvil in place. DO NOT completely tighten the screw.

4. Place the indenter in the stationary jaw so that the marked surface faces outward. Insert the die retaining screw through the hole of the stationary jaw and hole of the indenter, and tighten the screw just enough to hold the indenter in place. DO NOT completely tighten the screw.

5. Carefully close the tool handles, making sure that the anvil and indenter align properly. Continue closing the tool handles until the ratchet engages sufficiently to hold the anvil and indenter in place, then tighten both die retaining screws.

6. To disassemble, close the tool handles until the ratchet releases, remove the two die retaining screws, then slide the dies out of the tool jaws.

4. CRIMPING PROCEDURE

NOTE

This tool is provided with a crimp adjustment feature. Initially, the crimp height of a sample terminal should be verified in accordance with Section 5.

Refer to Figure 1, and select wire of the specified size and insulation diameter. Strip the wire to the length indicated in Figure 1, taking care not to nick or cut wire strands.

Refer to Figure 3, and proceed as follows:

1. Hold the tool so that the back (wire side) is facing you. Squeeze tool handles together and allow them to open fully.

2. Place the terminal in the proper crimping chamber (match color code to terminal insulation) so that the edge of the insulation aligns with the edge of the indenter. The wire barrel should be at the back of the tool.

3. Hold the terminal in position, and squeeze the tool handles together until ratchet engages sufficiently to hold the terminal. DO NOT deform the wire barrel.

4. Insert the stripped wire into the wire and holding the wire in place, squeeze the tool handles together until the ratchet releases. Allow the tool handles to open, and remove the crimped terminal.

5. Inspect the terminal crimp height according to Section 5.

5. CRIMP HEIGHT INSPECTION

This inspection requires the use of calipers. A lead rod can be used to check the crimp height. Crimp a rod in each of the crimping chambers. Check the crimp height of the rod against the crimp height dimension given in Figure 4.

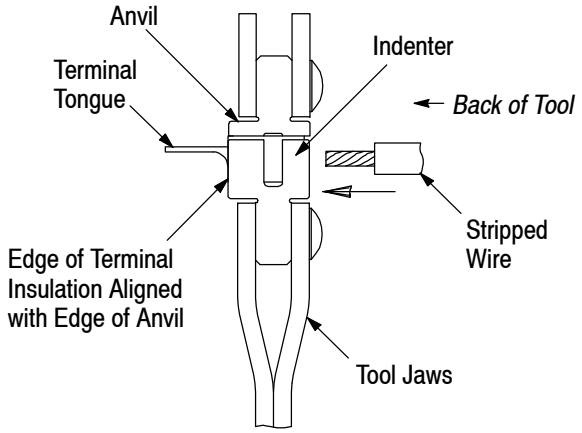

Figure 3

6. CRIMP HEIGHT INSPECTION

This inspection requires the use of calipers. A lead rod can be used to check the crimp height. Crimp a rod in each of the crimping chambers. Check the crimp height of the rod against the crimp height dimension given in Figure 4.

Lead Rod Diameter	Crimping Chamber Marking	Crimp Height Dimension
4.8 [.19]	Y (Yellow)	3.35±0.15 [.132±.006]
3.2 [.12]	B (Blue)	2.44±0.15 [.096±.006]
3.2 [.12]	R (Red)	2.08±0.15 [.082±.006]

Figure 4

If the crimp height conforms to the dimension, the tool and die assembly are considered dimensionally correct. Lubricate the tool with a thin coat of any good SAE 20 motor oil. If it does not, adjust the crimp height according to Section 6. If the adjustment does not result in acceptable crimp height, the die assembly or tool may have to be replaced.

7. RATCHET ADJUSTMENT (Figure 5)

The tool ratchet mechanism features an adjustment wheel with numbered settings. The adjustment wheel controls the amount of handle pressure exerted on the jaws during crimping. Check the crimp height according to Section 5. If the crimp height is not acceptable, adjust the crimp height as follows:

1. Remove the lockscrew from the ratchet adjustment wheel.

2. With a screwdriver, adjust the ratchet wheel from the front of the tool.

3. Observe the ratchet adjustment wheel. If a tighter (smaller) crimp height is required, rotate the adjustment wheel *counterclockwise* to a higher-numbered setting. If a looser (larger) crimp height is required, rotate the adjustment wheel *clockwise* to a lower-numbered setting.

4. Re-assemble the lockscrew.

5. Make a sample crimp. If the crimp height is acceptable, the adjustment setting is correct. If the crimp height is unacceptable, continue to adjust the ratchet, and again measure a sample crimp.

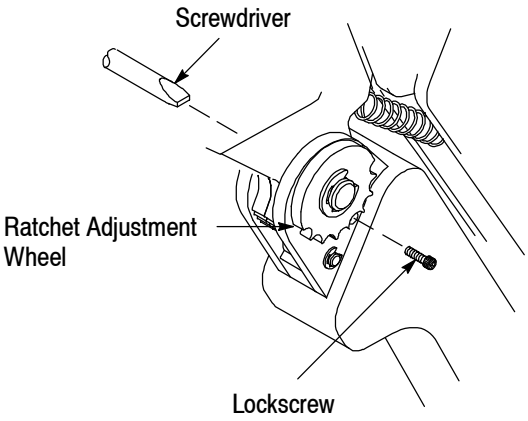

Figure 5

8. MAINTENANCE AND INSPECTION

8.1. Maintenance

Ensure that the tool frame and dies are clean by wiping them with a clean, soft cloth. Remove any debris with a clean, soft brush. Do not use objects that could damage any components. When not in use, keep tool handles closed to prevent objects from becoming lodged in the dies, and store in a clean, dry area.

8.2. Visual Inspection

Inspection of the dies should be made on a regular basis to ensure that they have not become worn or damaged. Inspect the crimping chambers for flattened, chipped, worn, or broken areas. If damage or abnormal wear is evident, the dies must be replaced. Refer to Section 8, REPLACEMENT.

9. REPLACEMENT

Customer-replaceable parts are shown in Figure 1. Available separately, Repair Kit 679221-1 includes a replacement lock nut and a variety of pins, rings, screws, and springs. If the dies are damaged or worn excessively, they must be replaced. Order the repair kit and replaceable parts through your representative, or call 1-800-526-5142, or send a facsimile of your purchase order to 717-986-7605, or write to:

CUSTOMER SERVICE (038-035)
TYCO ELECTRONICS CORPORATION
PO BOX 3608
HARRISBURG PA 17105-3608

10. REVISION SUMMARY

Revisions to this instruction sheet include:

- Updated document to corporate requirements

Tooling Compatible with Dies 58423-1

PRO-CRIMPER III Hand Tool 354940-1
(Instruction Sheet 408-9930)

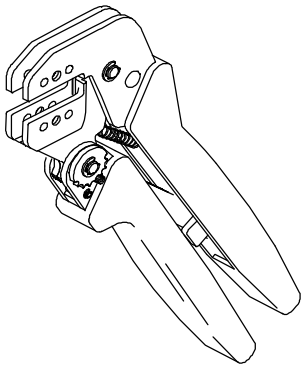

SDE-SA Hand Tool 9-1478240-0
(Instruction Sheet 408-8851)

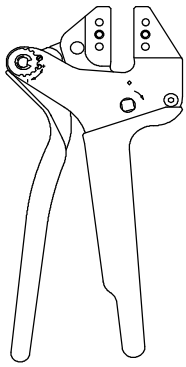

SDE Bench Terminator 1490076-2
(Customer Manual 409-10052)

626 Adapter 679304-1
(Instruction Sheet 408-4070)

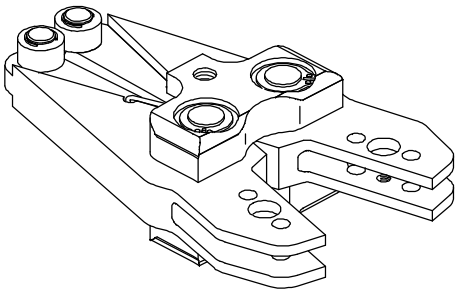

Battery Tool (Shouldered Die) 1725837-1, -2
(Customer Manual 409-10053)

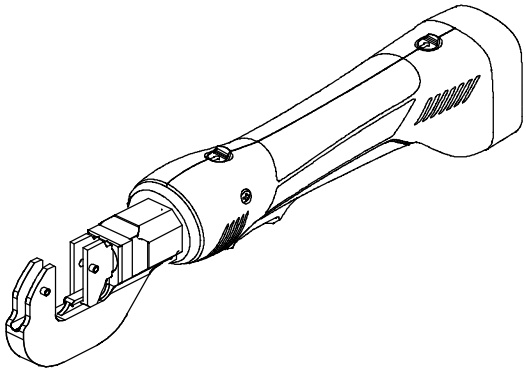

Battery Tool (Pin Die) 1213890-1, -2
(Customer Manual 409-10065)

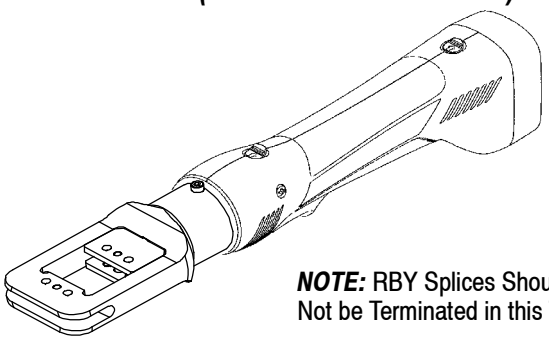

NOTE: RBY Splices Should Not be Terminated in this Tool